CCG CABLE TERMINATIONS

BOTTOM ENTRY ANGLE™

JUNCTION BOX - Ex eb I, Ex eb IIC, Ex ec IIC, Ex tb IIIC

for Hazardous Area Installations

Features and Benefits

- Bottom Entry Angle™ Box for use in Group I mining (low impact areas), Group II and Group III applications.
- Bottom Entry Angle™ Box for hazardous area lighting applications.
- Screw-on lid provides ease of installation. Lid locking with a special key prevents unauthorized tampering.
- Supplied complete with safety securing lid lanyard.
- Bottom Entry Angle™ Box is angled to allow ease of termination and inspection.
- Only approved CCG cable glands and Ex e terminals must be used.
- DIN Rail mounting studs are provided for use with terminal blocks.
- Dust and watertight to IP66/68, when fitted with CCG sealed cable glands.
- No drilling of the cable entries required.
- Internal earthing to all entries and rail.

Technical Data

Type:	Bottom Entry Angle™ Box
Box Material:	Impact corrosion and UV resistant glass reinforced polyester compound Polycarbonate (see-through adapt-a-lids) O ring seals: Silicone or Sarlink seals. Terminals: Wellamid or Wemidd
Inserts:	Brass, internal earth continuity ring and earth stud provided
Optional Accessories:	Ex Certified Terminals, Box Spanner (Lid Locking Key) 3-Blanking plugs are provided
Note:	The installer should check that the materials are suitable for the installation environment.

Standards and Certifications

Equipment Protection Levels:	SANS: (Finished)Ex e IIC T6 Gb / Ex nA IIC T6 Gc / Ex tb IIIC T70°C Db SANS: (Unfinished) Ex e IIC Gb / Ex nA IIC Gc / Ex tb IIIC Db IECEx/INMETRO: (Finished) Ex eb I Mb / Ex eb IIC T6 Gb / Ex ec IIC T6 Gc / Ex tb IIICT70°C Db / Ex tc IIIC T70°C Dc IECEx/INMETRO: (Unfinished) Ex eb I Mb / Ex eb IIC Gb / Ex ec IIC Gc / Ex tb IIIC Db / Ex tc IIIC Dc ATEX/UKEX: (Finished) Ex I M2 / II 2 GD / II 3 GD Ex eb I Mb / Ex ebIIC T6 Gb / Ex ec IIC T6 Gc / Ex tb IIIC T70°C Db / Ex tc IIIC T70°C Dc ATEX/UKEX: (Unfinished) Ex I M2 / II 2 GD / II 3 GD Ex eb I Mb /Ex eb IIC Gb / Ex ec IIC Gc / Ex tb IIIC Db/ Ex tc IIIC Dc CCC: (Finished) Ex eb IIC T6 Gb, Ex tb IIIC T70°C Db, Ex tc IIIC T70°C Dc CCC: (Unfinished) Ex eb IIC Gb, Ex tb IIIC Db, Ex tc IIIC Dc
Ambient Temperature:	-60°C to +55°C (Finished)
Service Temperature:	-60°C to +110°C (Unfinished)

Conformance:	Standard:	Certificate:	
IECEx	IEC 60079 Part 0, 7, 31, IEC 60529	IECEx MSC 20.0003X	(Finished)
	IEC 60079 Part 0, 7, 31, IEC 60529	IECEx MSC 20.0004U	(Unfinished)
ATEX	EN 60079 Part 0, 7, 31	CML 14ATEX3036X	(Finished)
	EN 60079 Part 0, 7, 31	CML 14ATEX4038X	(Finished)
	EN 60079 Part 0, 7, 31	CML 14ATEX3037U	(Unfinished)
	EN 60079 Part 0, 7, 31	CML 14ATEX4039U	(Unfinished)
UKEX	EN/BS 60079 Part 0, 7, 31	CML 21UKEX3008X	(Finished)
	EN/BS 60079 Part 0, 7, 31	CML 21UKEX4010X	(Finished)
	EN/BS 60079 Part 0, 7, 31	CML 21UKEX3007U	(Unfinished)
	EN/BS 60079 Part 0, 7, 31	CML 21UKEX4009U	(Unfinished)
INMETRO (Brazil)	ABNT NBR IEC 60079 Part 0, 7, 31, IEC 60529	TÜV 15.0481X	(Finished)
	ABNT NBR IEC 60079 Part 0, 7, 31, IEC 60529	TÜV 15.0482U	(Unfinished)
CCC/CNEx (Chinese)	GB/T3836.1, 3, 31-2021	CNEx 21.3507X	(Finished)
	GB/T3836.1, 3, 31-2021	CCC 2021312303000506	(Finished)
	GB/T3836.1, 3, 31-2021	CNEx 21.3390X	(Unfinished)
	GB/T3836.1, 3, 31-2021	CCC 2021312313000393	(Unfinished)
SANS	SANS/IEC 60079 Part 0, 7, 31	MASC S/21-9001X	(Finished)
	SANS/IEC 60529	MASC S/21-9002U	(Unfinished)
IP66/68 2m Protection	IEC 60529	IECEx CML 15.0071U	
Marine ABS	IEC 60529	ABS 20-SG1952738-1-PDA	
DNV-GL	IEC 60529	DNV-GL TAE0000011	
ClassNK	IEC 60079 Part 0, 7, 31	TA20268M	
Deluge Protection	DTS-01	CML 14CA370-1	
Short Circuit/ Cont.Current	IEC 60947-7-2, IEC 62444	CATAPULT OR/15/11677_2	

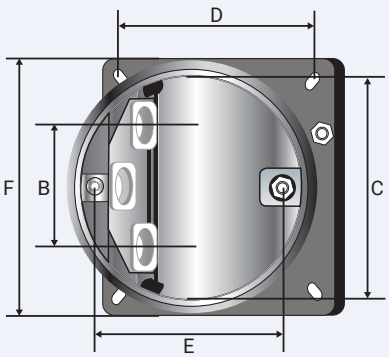

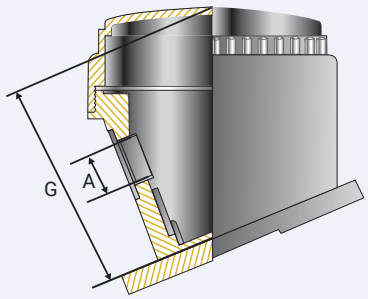

PATENTED

Conditions and limitations for safe use

- In Group I applications, the junction box must only be used in low impact areas and where it is not exposed to oils or greases.
- Only the CCG tool supplied shall be used for opening / closing the enclosure.
- Suitably certified cable glands and/or plugs shall be used in the enclosure threaded entries.
- Terminal blocks shall only be used on the applicable rail and shall allow sufficient space to make connections and to close the cover / lid.
- Only the Weidmuller terminals shown in Table 2 may be used.
- The creepage and clearance between terminal blocks and from the terminal block to any earthed / bonded metallic part shall comply with the EN60079-7 requirements for the acceptable voltage of the terminal blocks.

Product Code	Entry Thread 'A'	Inner Diameter 'B'	Distance Between Centres 'C'	Mounting Centres 'D'	Rail Mounting Centres 'E'	Outer Diameter 'F'	Overall Height 'G'
100921-BE	M20	66.0	101.0	92.0	81.0	118.0	105.0
100922-BE	M25	52.0	123.0	104.0	78.0	140.0	105.0
100923-BE	M32	110.0	181.0	165.0	156.0	202.0	140.0

All dimensions are in mm.

BOTTOM ENTRY ANGLE™ JUNCTION BOX

CCG CABLE TERMINATIONS

Conditions and limitations for safe use

- The current in the junction box is limited by the size of the conductor and shall not exceed as per the table below.
- Only the terminals listed below may be used, following the specific installation conditions set down by the terminal manufacturer/terminal certification.

Manufacturer	Certificate No.	Ex Coding	Type	Conductor / Terminal Block Size	Maximum Current	
					≤ 55°C Ambient	≤ 40°C Ambient
Weidmuller	IEC Ex ULD14.0005U Demko 14ATEX1338U CCC 2021312303000506	Ex eb IIC	WDU 2.5, 4, 6, 10, 16, 35 and 70N WPE 2.5, 4, 6, 10, 16, 35 and 70N	2,5 mm²	8,34 A	11,90 A
				4 mm²	11,12 A	15,86 A
				6 mm²	14,25 A	20,33 A
				10 mm²	19,81 A	28,26 A
				16 mm²	26,42 A	37,68 A
				35 mm²	43,46 A	61,98 A
				50 mm²	52,50 A	74,88 A
				75 mm²	66,75 A	95,21 A
Weidmuller	IECEx TUR18.0024U TÜV 18 ATEX 8221U CCC 2021312313000393	Ex eb IIC	AKZ4 and AKE4	4mm²	-	-

Wiring and Installation instructions for Bottom Entry Angle™ Box without components

- Installation must be carried out by a competent person.
- The box must not be modified in any way, as this will invalidate the certification.
- Where cables enter the box they must be secured by CCG Cable Glands appropriate to the make up of the cable.
- Unused entry apertures must be blanked with certified CCG Blanking Plugs.
- To maintain IP 66/68 a thread seal gasket between the box and cable gland must be installed.
- Before replacing the lid, ensure the lid gasket is in place.
- The use of a CCG Box Spanner (Lid Locking Key) is required to maintain the tamper proof integrity of the box, refer Figure 1.

Wiring and Installation instructions for Bottom Entry Angle™ Box™ with components

- Installation must be carried out by a competent person.
- Do not install under live current conditions.
- The box must not be modified in any way, as this will invalidate the certification.
- All wiring must be carried out in accordance with the relevant Codes of Practice.
- The wiring insulation must not extend by more than 1.0mm from the metal face of the terminal as shown in Figure 2.
- The voltage and current value of the box must not be exceeded.
  See relevant certificate for current limitations for conditions of use / schedule of limitations.
- Only those terminals shown in the terminal schedule may be incorporated in the box, refer Table 1.
- Inner cable bedding must protrude into the box by a minimum of 20mm past the cable entry point.
- Not more than one single or multiple strand lead shall be connected into either side of the terminals.
- Only earth conductors of equal size shall be connected with rail mounted terminals.
- All terminal screws used and unused shall be tightened.
- A parallel shaft screw driver of the correct size should be used for rail mounted terminals screws.
- Where cables enter the box they must be secured by CCG Cable Glands appropriate to the make up of the cable.
- Unused entry apertures must be blanked with certified CCG Blanking Plugs.
- To maintain IP66/68 a thread seal gasket between the box and cable gland must be installed.
- Before replacing the lid, ensure the lid gasket is in place.
- The use of a CCG Box Spanner (Lid Locking Key) is required to maintain the tamper proof integrity of the box, refer Figure 1.

FIGURE 1

To ensure the box apparatus is tamper proof: Screw on, tighten and lock lid in place by means of a CCG Box Spanner (Lid Locking Key).

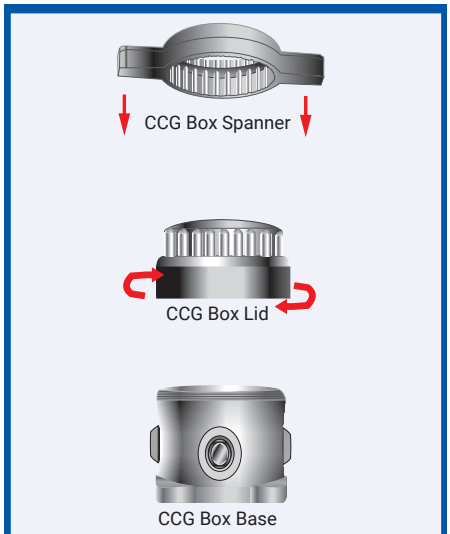

CCG Box Spanner

Product Code	Box Size
4012-0	0
401201	1
401202	2

TABLE 1

Box Type	Box Size	Terminal Type and Size	Max Quantity	Rail Size
BE Angle Box	1	4mm² mini terminal	8	15
BE Angle Box	2	2.5mm²	12	35
BE Angle Box	2	4mm² mini terminal	8	15
BE Angle Box	2	4mm²	10	35
BE Angle Box	2	6mm²	8	35
BE Angle Box	2	10mm²	7	35
BE Angle Box	3	2.5mm²	20	35
BE Angle Box	3	4mm² mini terminal	14	15
BE Angle Box	3	4mm²	16	35
BE Angle Box	3	6mm²	12	35
BE Angle Box	3	10mm²	12	35
BE Angle Box	3	16 mm²	10	35
BE Angle Box	3	35mm²	6	35

TABLE 2

VOLTAGE PER TERMINAL CONFIGURATION

Terminals	Volt	Earth Terminals
AKZ 4	275V	AKE 4
WDU 2.5	550V	WPE 2.5
WDU 4	550V	WPE 4
WDU 6	550V	WPE 6
WDU 10	550V	WPE 10
WDU 16	550V	WPE 16
WDU 35	550V	WPE 35

TS 15 Mini Rail

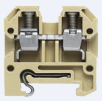

Mini Terminals for conductor sizes 0.5 to 4mm²

TS 35 Top Hat Rail

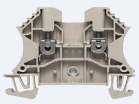

Terminals for conductor sizes 0.5 to 70mm²

FIGURE 2

The wiring insulation must not extend by more than 1.0mm from the metal face of the terminal as shown below.